HOME SERVICES SUPPORT SYSTEM

Hein Min Htun
Student, 5th Year, B.C.Sc.
University of Computer Studies, Hinthada

Supervised By
Daw Khaing Thazin Nwe
Department of Information Technology Supporting and Maintenance
University of Computer Studies, Hinthada

Abstract. The Home Service Support System is designed to streamline the process of managing and scheduling home maintenance tasks. This system allows homeowners to easily book, track, and manage various home services such as plumbing, electrical repairs, cleaning, and more through a user-friendly interface [1]. Service providers can register and list their services, while users can browse, compare, and book appointments at their convenience. The system includes features like automated reminders, payment processing, and service history tracking, making home maintenance more efficient and organized. By digitizing the process, the Home Services Support System aims to enhance customer satisfaction, reduce administrative overhead, and ensure timely service delivery. This system is developed using PHP programming language with Laravel framework and Mysql database.

Keyword: home, services, maintenance, customer, administrative

INTRODUCTION

A Home Service Support System is a digital platform that connects homeowners with professional service providers for various maintenance and repair tasks such as plumbing, electrical work, cleaning, and more. It simplifies the process of finding, booking, and paying for home services by offering a user-friendly interface, real-time scheduling, secure online payments, and feedback systems. The platform benefits customers by providing easy access to trusted professionals, while service providers gain an efficient way to manage appointments, communicate with clients, and track their performance. Overall, it enhances convenience and transparency in home service management.

PROBLEM

The key problem in home service management is the lack of a centralized, reliable system to connect customers with skilled and trustworthy service providers. Many customers struggle to find qualified professionals, compare prices, and schedule services at convenient times, often relying on outdated methods like word-of-mouth recommendations or unreliable directories. This results in uncertainty about the credibility and quality of the providers they hire, raising concerns about safety and service reliability. On the other hand, service providers face difficulties in promoting their business, managing appointments, and ensuring customer satisfaction. Payment issues, such as lack of transparency or secure options, further complicate

Accepted Date: 25.10.2024
www.ucsh.edu.mm

the process. This fragmented system leads to inefficiencies, delays, and poor communication, negatively impacting both customers and service providers.

APPROACH

The system includes three main components: admin, service providers and customers. Figure 1, depicts the customer flow in the system. Customers can browse the Home Page, Services, and Contact information without logging in. To access detailed service information and make bookings, they must log in. New customers can register and then log in. Once logged in, they can view service details, book services, leave and read reviews, and track their order history. They also have the option to log out [2]. On the service provider side, Initially, providers can view the Home Page, Services, and Contact information but cannot create posts or view details. To post services, they must log in. After registering and logging in, providers can create service posts, which require admin approval before becoming visible to users. Providers can also manage comments, reviews, and bookings, and update their profile photo and password, with the option to log out when done.

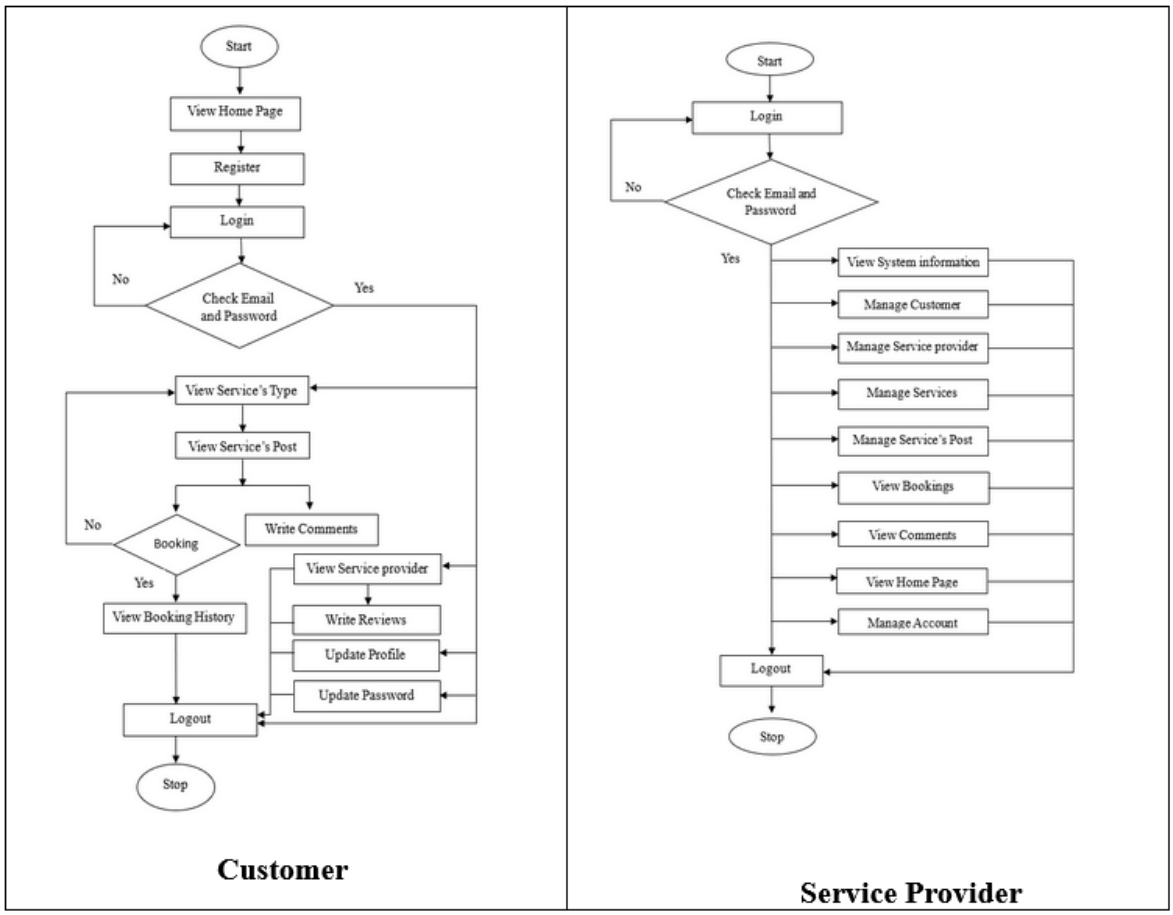

Figure 1: System Flow Diagram

Figure 2 illustrates the system flow diagram for the admin component. The admin logs in to access their profile and manage various aspects of the system. They can monitor the overall system flow and oversee service requests posted by users. Additionally, the admin has the ability to manage, update, or remove services offered by providers. They can read and respond to comments left by both customers and providers on service posts, ensuring smooth

Accepted Date: 25.10.2024
www.ucsh.edu.mm

communication between both parties. The admin also has the authority to review feedback and ratings about service providers, allowing them to maintain quality control and ensure that only trusted and reliable providers are part of the platform.

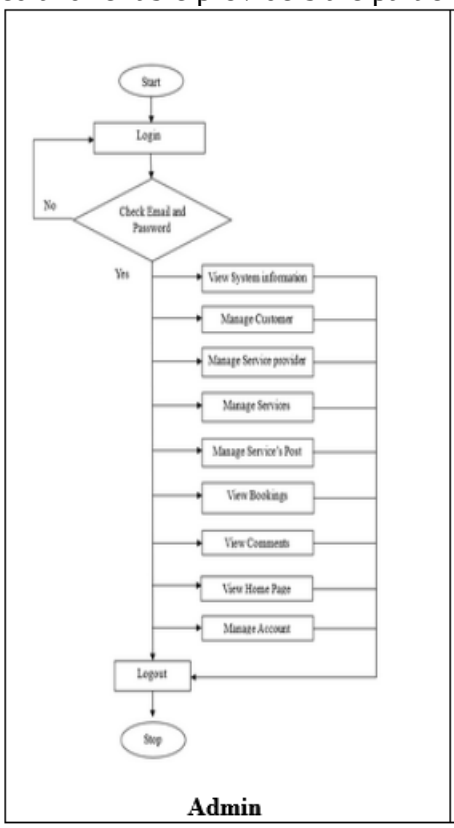

Figure 2: System Flow Diagram

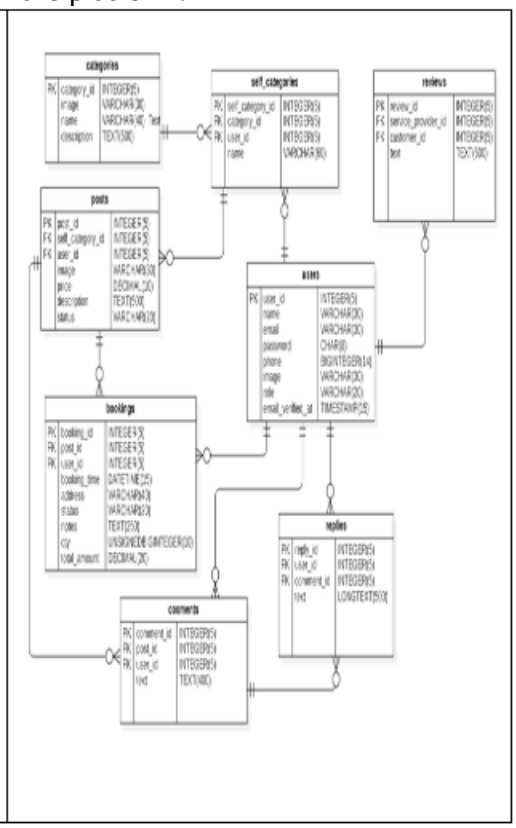

Figure 3: Database Design

Figure 3, displays the entity relationship diagram (ERD) for the Home Service Support System, which details the database's logical structure and relationships between entities. This diagram helps clarify how data is organized and interconnected, highlighting the relationships between customers, service providers, services, and admin roles. It visually represents the key entities such as users, services, bookings, reviews, and payments, along with their attributes and interactions. By mapping out these relationships, the ERD ensures a clear understanding of the system's data flow and its functional components [3].

RESULTS

The results of implementing the Home Service Support System show significant improvements in efficiency, user satisfaction, and service quality. Customers benefit from a streamlined process for finding, booking, and paying for services, leading to quicker response times and more reliable service. Service providers experience better organization of their appointments and increased visibility to potential clients, resulting in higher booking rates and improved business growth. The system’s feedback and review features have enhanced accountability, ensuring that only high-quality service providers remain active on the platform. Additionally, administrative oversight has led to better service management, fewer disputes, and more accurate performance tracking. Overall, the system has fostered a more efficient and transparent marketplace for home services.

Accepted Date: 25.10.2024
www.ucsh.edu.mm

Figure 4: Implementation of this system

CONCLUSION

The Home Service Support System streamlines the process of connecting customers with reliable service providers, offering features like real-time scheduling, secure payments, and feedback mechanisms. It improves convenience, transparency, and trust for users, while helping service providers manage their operations efficiently. Overall, the system enhances service quality and satisfaction for both customers and providers in the home services industry. By centralizing the booking and management of home services, the system reduces the time and effort required for customers to find qualified professionals. Service providers benefit from increased visibility and the ability to efficiently manage their appointments, leading to higher booking rates and business growth. The integration of feedback and review features ensures that only high-quality providers remain on the platform, fostering accountability and trust.

REFERENCES

[1] Jon Duckett, November 18, 2011, Home Services Design and Build Websites, Available: https://wtf.tw/ref/duckett

[2] KishoriSharan(auth.), System Design, 2014, Available: https://raw.githubusercontent.com/ dotnet-architecture/eBooks/main/current/architectin

[3] Smith, Alex. Table Relationships and Database Design. November 18, 2011. Available : https://wtf.tw/ref/duckett.

Accepted Date: 25.10.2024
www.ucsh.edu.mm